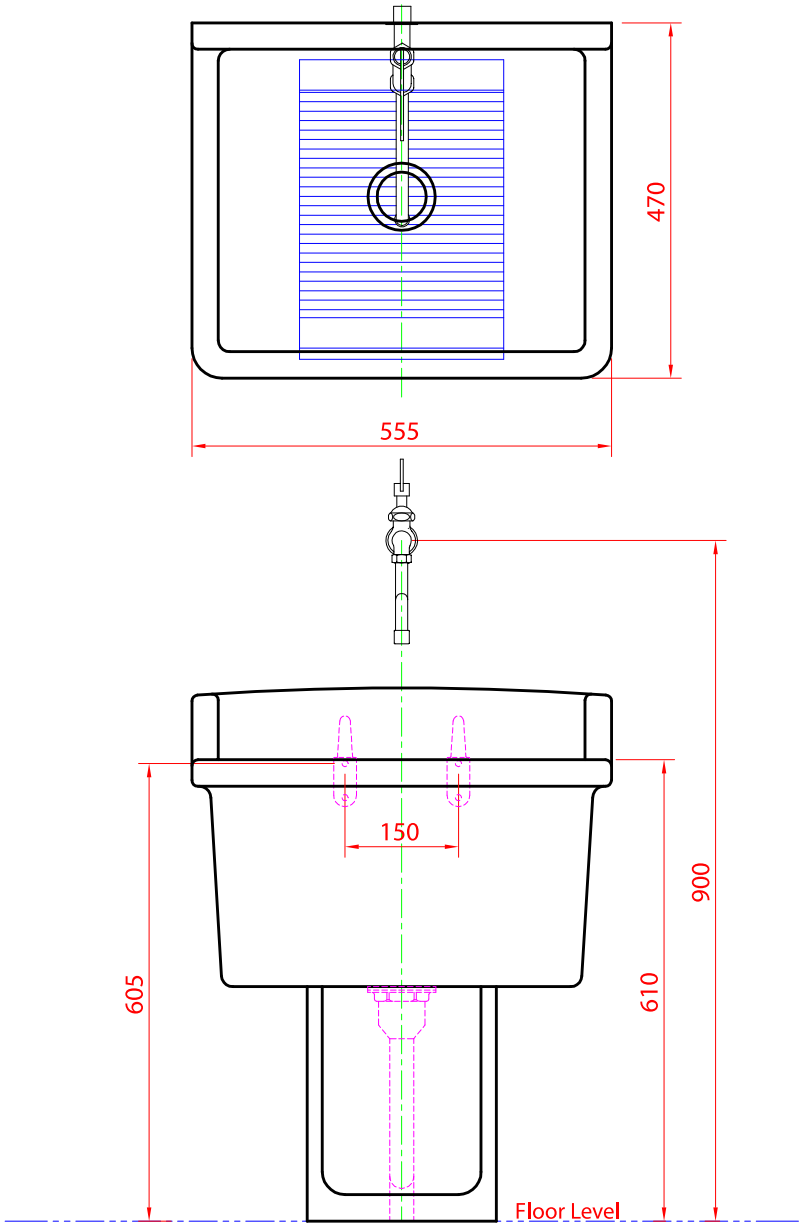
470
555
150
605
610
900
Floor Level

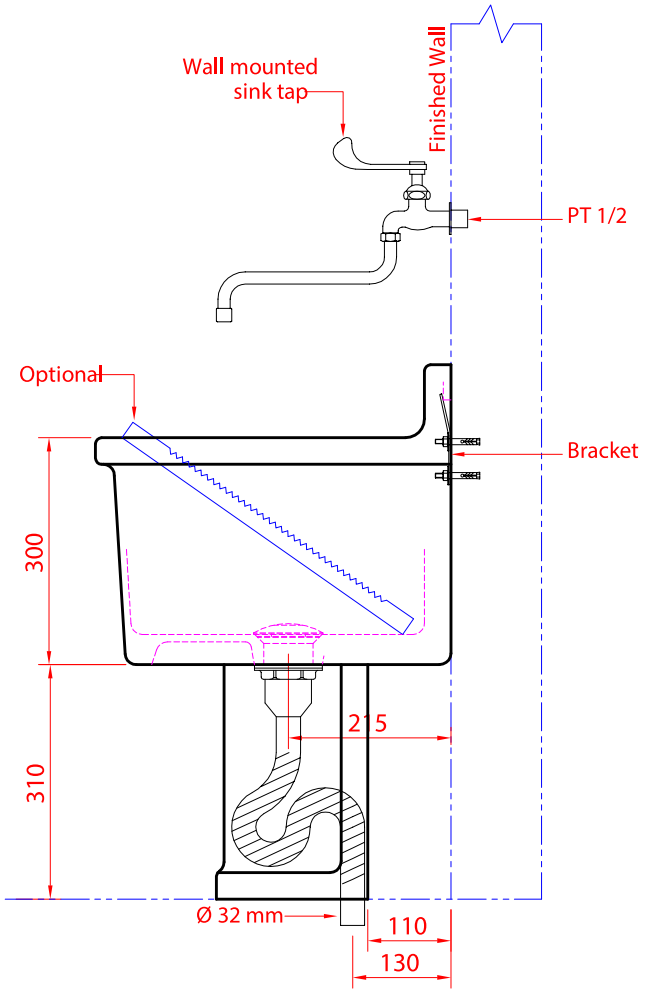
Wall mounted
sink tap
Finished Wall
PT 1/2
Optional
Bracket
300
310
215
Ø 32 mm
110
130