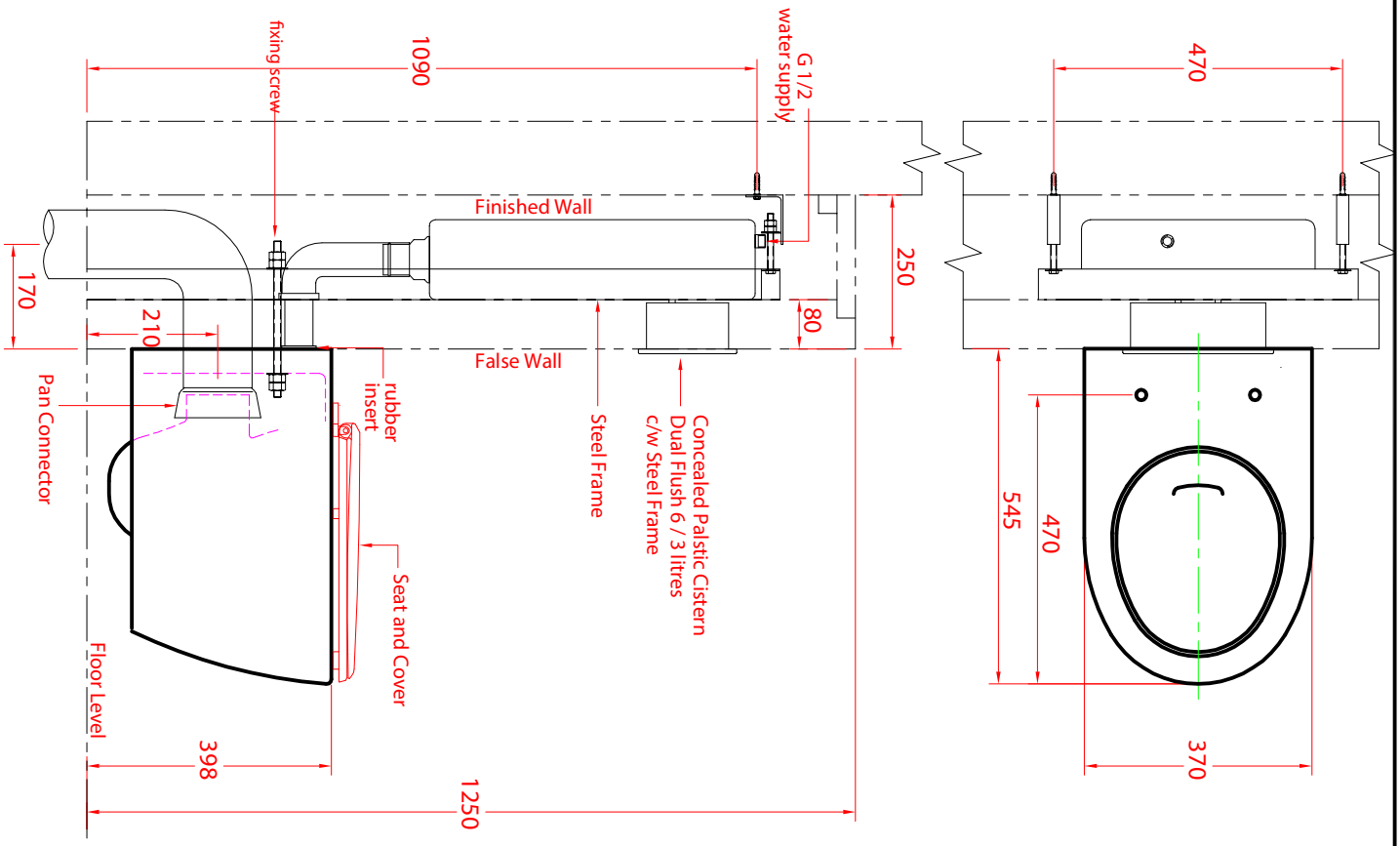

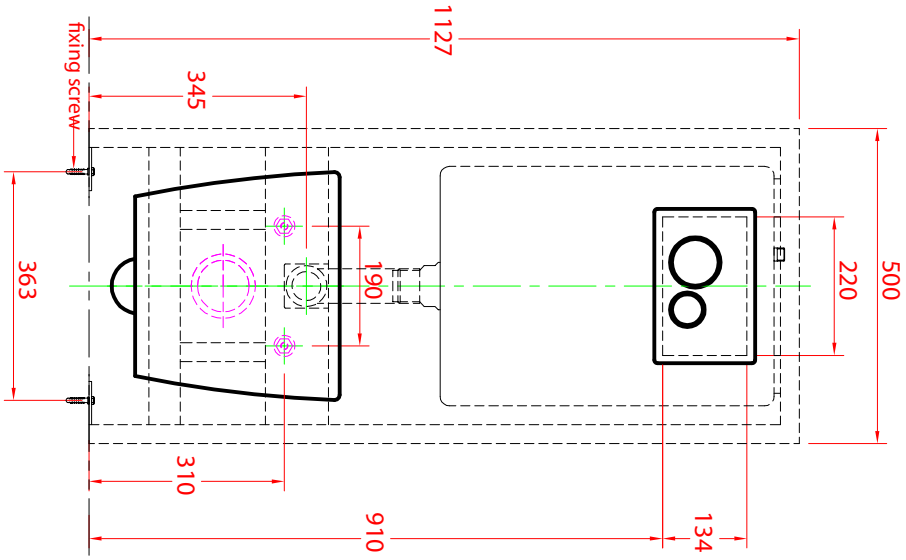

Trilliunware PT. TRILLIUN PRIMA SUKSES	DETAIL DRAWING			A4
	MODEL	WC RHODOLITE MONOBLOK WALL HUNG		
All dimensions are subject to normal manufacturing tolerance which may be changed without notice.	DATE	SCALE	DIMENSION	NUMBER
	04-10-2023	1 : 12	MM	WC - 13 - 01